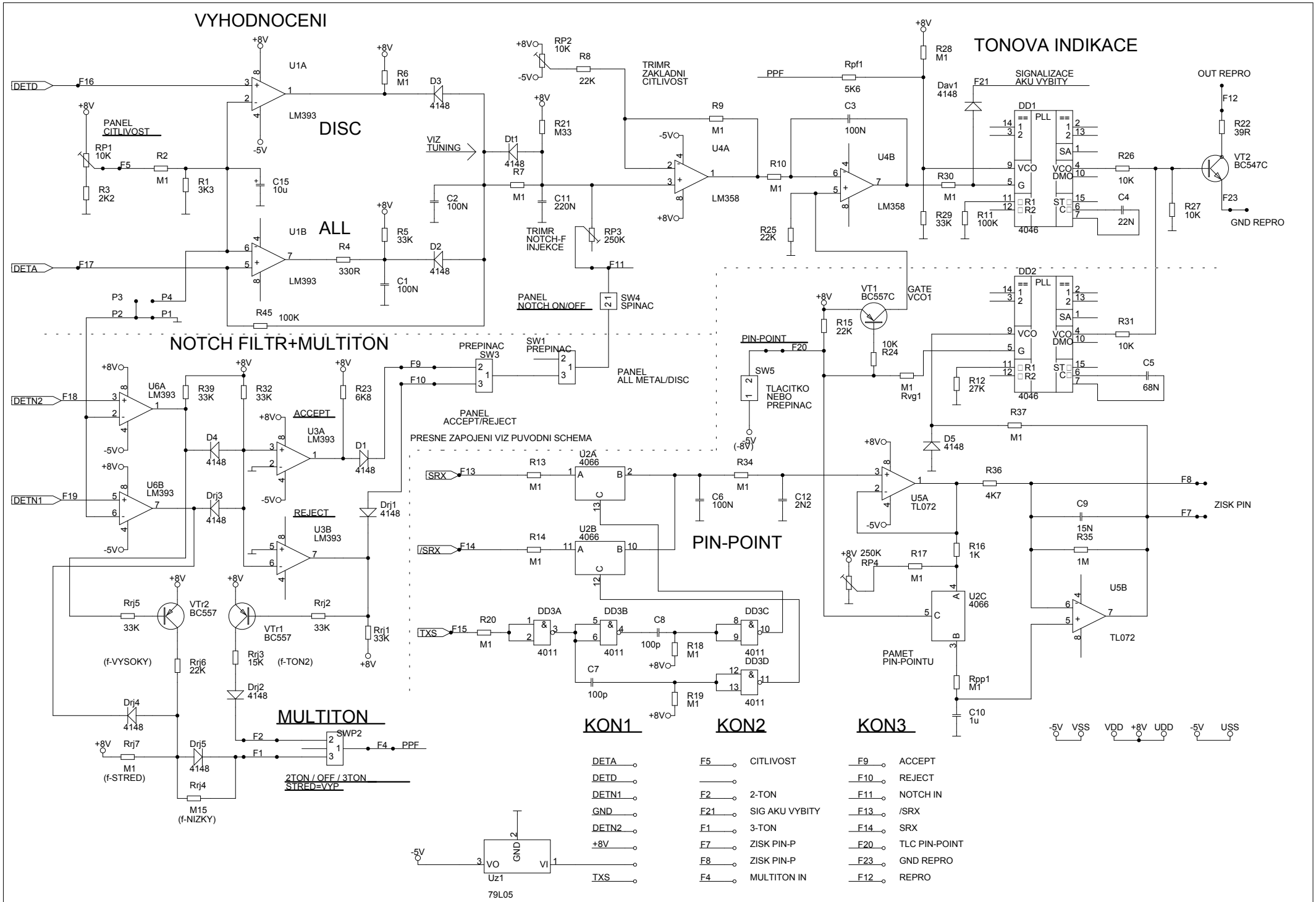
VYHODNOCENI
DISC
ALL
NOTCH FILTR+MULTITON
TONOVA INDIKACE
PIN-POINT
MULTITON
KON1
KON2
KON3
DETD
DETA
DETN2
DETN1
PANEL CITLIVOST
VIZ TUNING
TRIMR ZAKLADNI CITLIVOST
TRIMR NOTCH-F INJEKCE
PANEL NOTCH ON/OFF
PANEL ALL METAL/DISC
PREPINAC SW3
SW1 PREPINAC
PANEL ACCEPT/REJECT
PRESNE ZAPOJENI VIZ PUVODNI SCHEMA
ACCEPT
REJECT
PPF
SIGNALIZACE AKU VYBITY
OUT REPRO
GND REPRO
GATE VCO1
PIN-POINT
TLACITKO NEBO PREPINAC
ZISK PIN
PAMET PIN-POINTU
SRX
/SRX
TXS
(f-VYSOKY)
(f-TON2)
(f-STRED)
(f-NIZKY)
2TON / OFF / 3TON
STRED=VYP
-5V VSS VDD +8V UDD -5V USS
DETA
DETD
DETN1
GND
DETN2
+8V
TXS
F5 CITLIVOST
F2 2-TON
F21 SIG AKU VYBITY
F1 3-TON
F7 ZISK PIN-P
F8 ZISK PIN-P
F4 MULTITON IN
F9 ACCEPT
F10 REJECT
F11 NOTCH IN
F13 /SRX
F14 SRX
F20 TLC PIN-POINT
F23 GND REPRO
F12 REPRO
Uz1
79L05
Title
WWW.HQ-ELEKTRONIC.EU
Size
B
Document Number
SABRE ADVANCED 2006 / MODUL B
Rev
ZS
Date: Duben 13, 2007
Sheet: 3 of 3 sheets